SLEDGE

MONTAGE VORNE

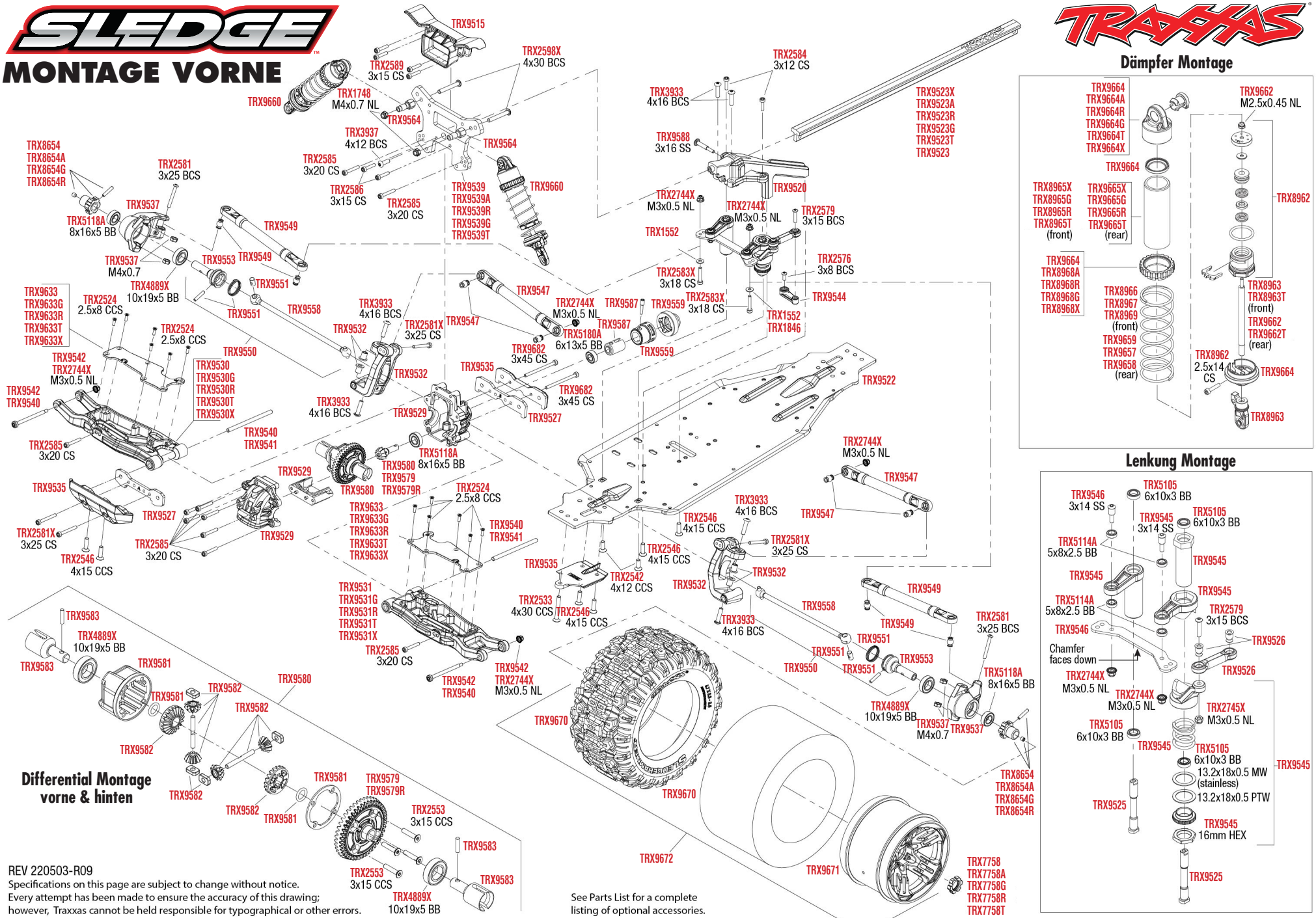

Differential Montage vorne & hinten

Dämpfer Montage

Lenkung Montage

REV 220503-R09

Specifications on this page are subject to change without notice. Every attempt has been made to ensure the accuracy of this drawing; however, Traxxas cannot be held responsible for typographical or other errors.

See Parts List for a complete listing of optional accessories.

SLEDGE™
MONTAGE CHASSIS

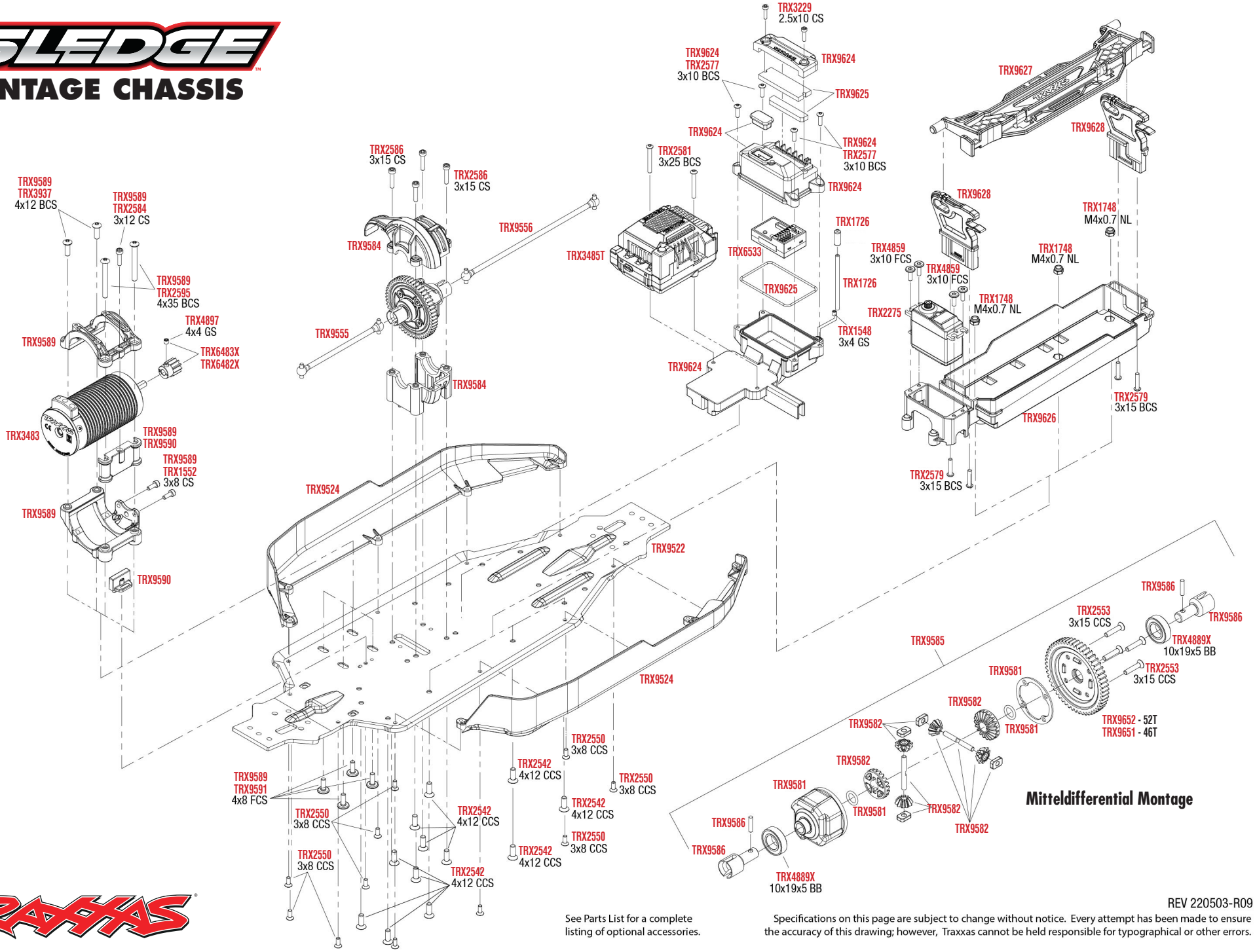

Mitteldifferential Montage

See Parts List for a complete listing of optional accessories.

REV 220503-R09

Specifications on this page are subject to change without notice. Every attempt has been made to ensure the accuracy of this drawing; however, Traxxas cannot be held responsible for typographical or other errors.

SLEDGE
MONTAGE HINTEN

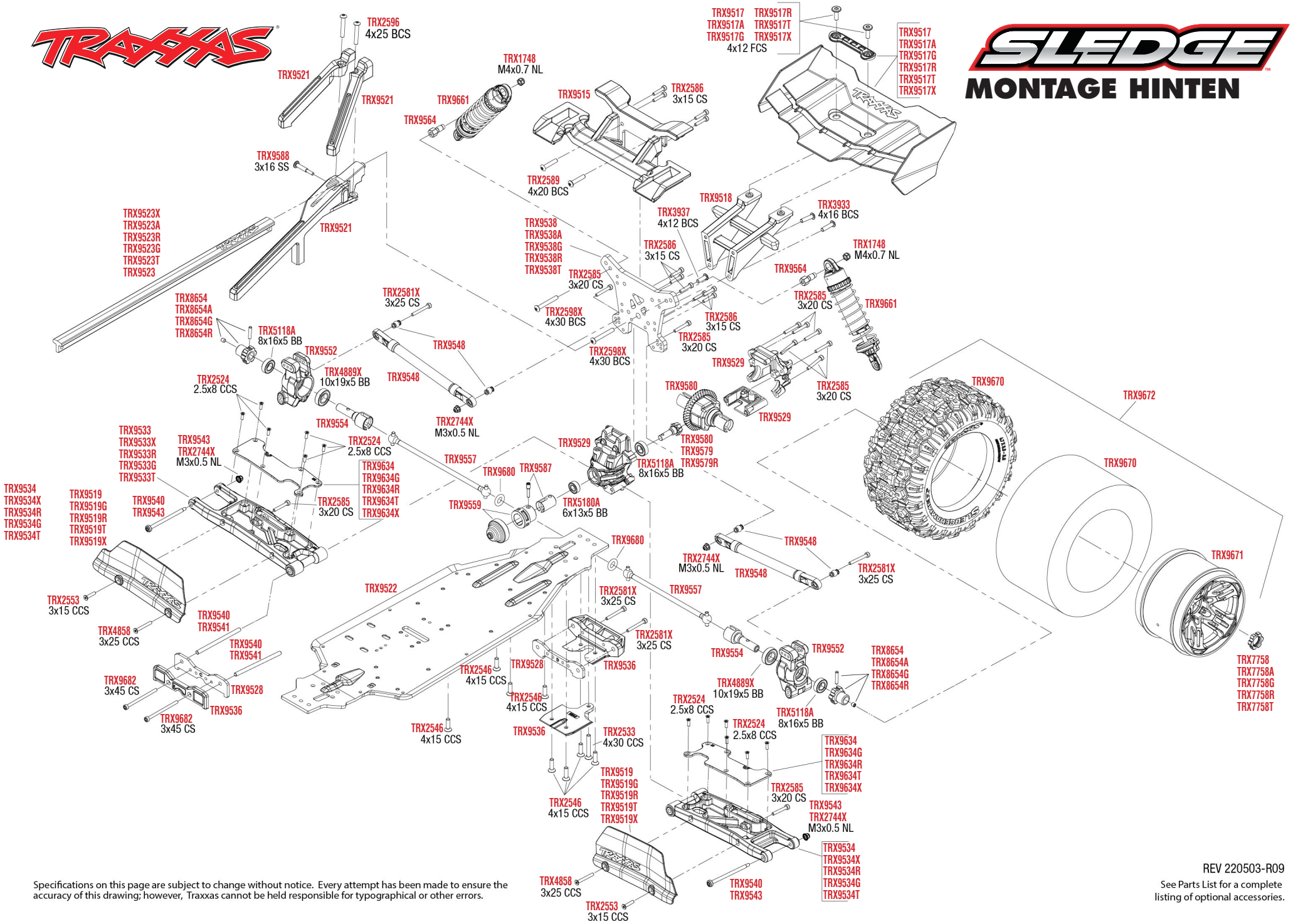

Specifications on this page are subject to change without notice. Every attempt has been made to ensure the accuracy of this drawing; however, Traxxas cannot be held responsible for typographical or other errors.

REV 220503-R09

See Parts List for a complete listing of optional accessories.

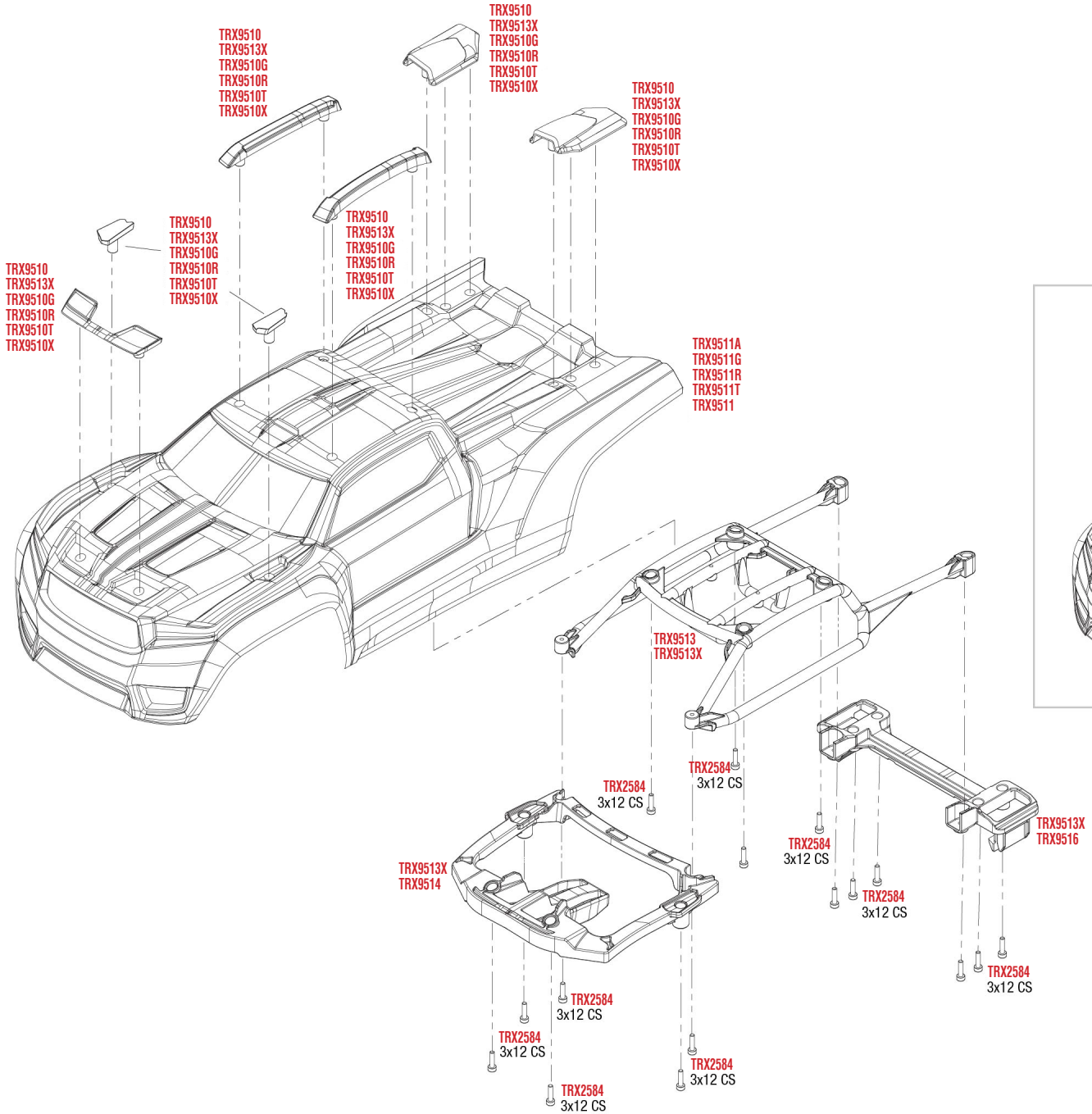

SLEDGE™
MONTAGE KAROSSERIE

Komplette Montage

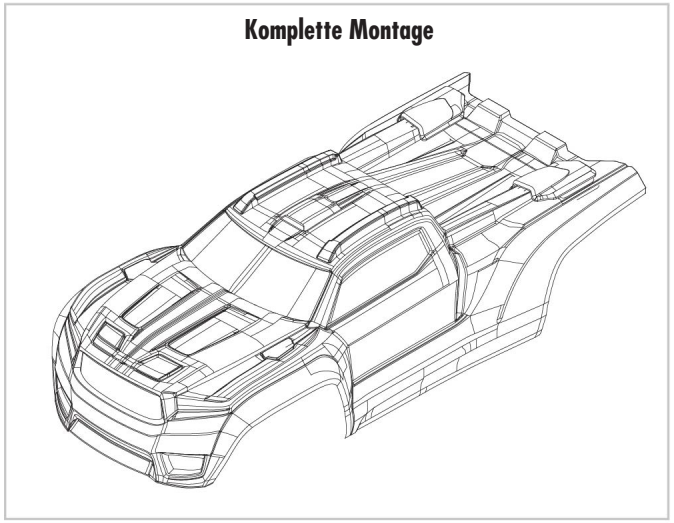

REV 220503-R09

See Parts List for a complete listing of optional accessories.

Specifications on this page are subject to change without notice. Every attempt has been made to ensure the accuracy of this drawing; however, Traxxas cannot be held responsible for typographical or other errors.